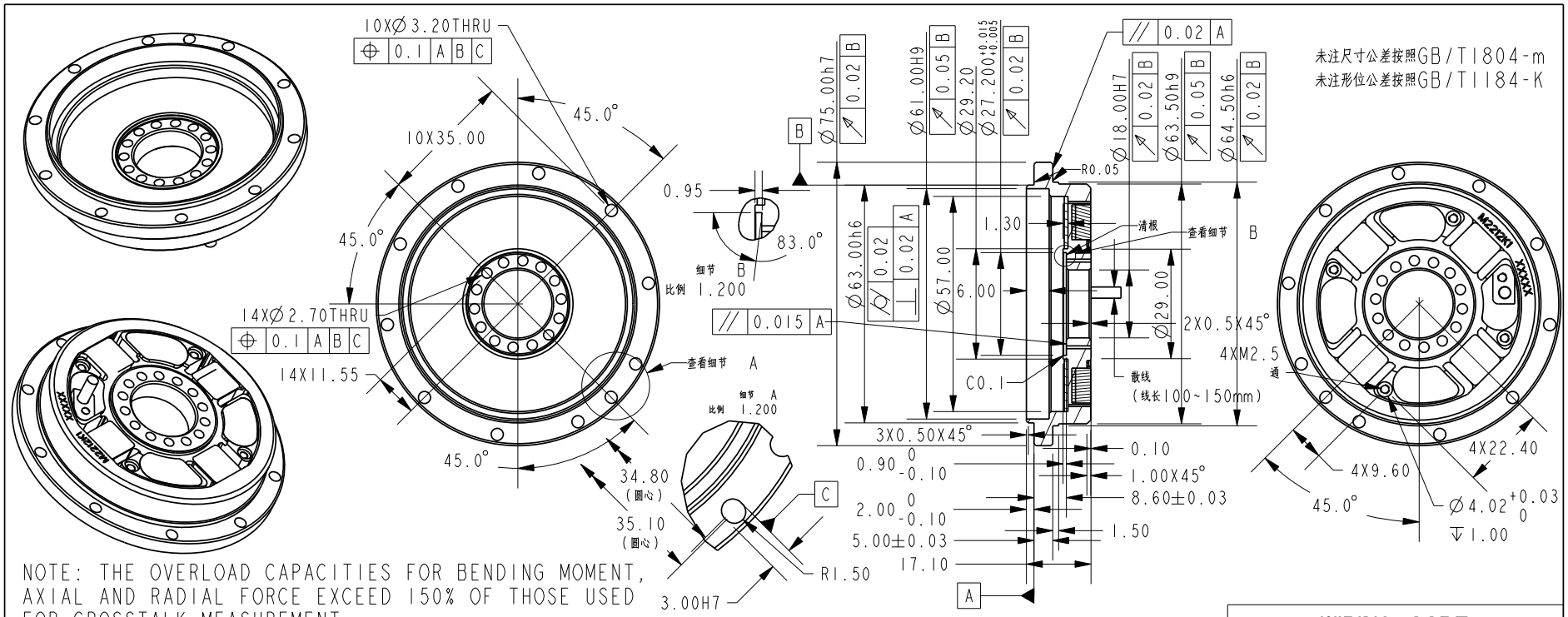

NOTE: THE OVERLOAD CAPACITIES FOR BENDING MOMENT, AXIAL AND RADIAL FORCE EXCEED 150% OF THOSE USED FOR CROSSTALK MEASUREMENT

SPECIFICATIONS

CAPACITY (Nm)	40
OVERLOAD CAPACITY (%F.S.)	300
DIFFERENTIAL OUTPUT @ F.S. NOMINAL V	2.5±2 *
POWER SUPPLY (V)	4.5 TO 5V
BRIDGE RESISTANCE (Ω) NOMINAL	350
NON-LINEARITY (%F.S.)	0.5
HYSTERESIS (%F.S.)	1.0
OPERATING TEMP. RANGE (°C)	-20 TO +100
CROSSTALK (%F.S.)	1.0
AXIAL FORCE FOR CROSSTALK (N)	250
RADIAL FORCE FOR CROSSTALK (N)	250
BENDING MOMENT FOR CROSSTALK (Nm)	10
TORSION ANGLE (CALCULATED)	0.055°
TORSIONAL STIFFNESS (KNm/RAD)	40
BENDING STIFFNESS (KNm/RAD)	6
MASS (KG)	0.07

DRAWING IN THIRD ANGLE PROJECTION

ATTENTION: RED WIRE MUST BE CONNECTED TO POSITIVE SUPPLY VOLTAGE AND BLACK TO GROUND. OTHERWISE CIRCUIT MAY GET DAMAGED!

* WHEN PWR SUPPLY IS 4.5V, OUTPUT WILL BE 2.25±1.75V

WIRING CODE

COLOR	FUNCTION
RED	+EX
BLACK	GND
GREEN	+SIG(CHN1)
WHITE	-SIG(CHN1)
YELLOW	+SIG(CHN2)
ORANGE	-SIG(CHN2)

SUNRISE INSTRUMENTS

www.srisensor.com

ROBOT JOINT TORQUE LOADCELL
D75MM, 40 Nm, DUAL OUTPUTS

UNLESS OTHERWISE SPECIFIED DIMENSIONS ARE IN MM	M2212K1	REV. 0.3